piezosystemjena
incredibly precise

PSH 1z - 4z

3-Axis Mirror Tilting Platform

- *Fast 3-axis Tip, Tilt, Z stage*
- *tilting range 1 - 4 mrad*
- *sub-µrad resolution*
- *2.7 - 5.8 kHz resonant frequency*

The PSH 1z, PSH 2z, PSH 3z and PSH 4z mirror tilting stages each consist of three active piezoelectric actuators. These actuators provide tip and tilt motion to the top plate, and when all are used together they provide a piston motion in the Z axis up to 8 µm.

Their construction is temperature compensated so that changes in environmental temperature do not affect the tilting angle. The tilting mirror mounts are pre-loaded, thus they are well suited for dynamic applications. One of their main advantages is a high resonant frequency – which is why these systems can provide sub-msec response time.

Closed-loop versions with integrated positioning control are available for high positioning linearity and repeatability. Non-magnetic material and other customer size requirements are available upon request. The series is designed for mirrors and optical components up to 50 mm in diameter.

Variants:

- Standard
- with strain gauge (SG)

Recommended Controller:
NV200/D Net

Applications

- Laser Tuning
- Laser Beam Stabilization
- Fiber Bragg Grating Technology
- Beam alignment
- Fine adjustment of mirrors, other optical components

piezosystemjena
incredibly precise

PSH 1z - 4z

Technical Data

	Unit	PSH 1z	PSH 1z SG	PSH 2z	PSH 2z SG
Part no. top plate Typ „A“ 25x25 mm 1“	-	K-201-10	K-201-11	K-202-10	K-202-11
Part no. top plate Typ „B“ 38x38 mm 1½“	-	K-201-20	K-201-21	K-202-20	K-202-21
Sensor	-	-	strain gauge	-	strain gauge
Axes	-	X Y Z	X Y Z	X Y Z	X Y Z
Tilting range open-loop (±10%)*	mrad	1		2	
Tilting range closed-loop (±0,2%)	mrad	-	0.8	-	1.6
Linear z-motion open-loop (±10%)*	µm	8		16	
Linear z motion closed-loop (±0,2%)	µm	-	6.4	-	12.8
Typ. resolution open-loop***	µrad	0.002		0.004	
Typ. resolution closed-loop***	µrad	-	0.02	-	0.04
Resonant frequency (unloaded)	Hz	5800		5400	
Resonant frequency incl.mirror 5 g	Hz	920		362	
Typ. repeatability*	µrad	-	0.8	-	1.1
Typ. non-linearity*	µrad	-	0.8	-	0.5
Stiffness in z	N/µm	25		50	
Capacitance per axis (±20%)**	µF	0.7		1.8	
Voltage	V	-20 … 130		-20 … 130	
Material	-	Stainless Steel/ Aluminum		Stainless Steel/ Aluminum	
Cable length****		1	1.2	1	1.2
Tilting axis position		5mm below the top plate			
Dimensions (LxWxH)	mm	25x25x24	25x25x32	25x25x33	25x25x41
Mass	g	48	80	58	90

* typical value measured with NV 40/3 controller (closed loop: NV 40/3 CLE)

** typical value for small electrical field strength

*** the resolution is only limited by the noise of the power amplifier and metrology.

**** Connector voltage standard: LEMO 0S.302; connector feedback sensor standard: LEMO 0S.304

piezosystemjena
incredibly precise

PSH 1z - 4z

Technical Data

	Unit	PSH 3z	PSH 3z SG	PSH 4z	PSH 4z SG
Part no. top plate Typ „A“ 25x25 mm 1“	-	K-203-10	K-203-11	K-204-10	K-204-11
Part no. top plate Typ „B“ 38x38 mm 1½“	-	K-203-20	K-203-21	K-204-20	K-204-21
Sensor	-	-	strain gauge	-	strain gauge
Axes	-	X Y Z	X Y Z	X Y Z	X Y Z
Tilting range open-loop (±10%)*	mrad	3		4	
Tilting range closed-loop (±0,2%)	mrad	-	2.4	-	3.2
Linear z-motion open-loop (±10%)*	µm	26		33	
Linear z motion closed-loop (±0,2%)	µm	-	20	-	26
Typ. resolution open-loop***	µrad	0.006		0.008	
Typ. resolution closed-loop***	µrad	-	0.06	-	0.08
Resonant frequency (unloaded)	Hz	3900		2700	
Resonant frequency incl.mirror 5 g	Hz	295		210	
Typ. repeatability*	µrad	-	2.1	-	3.2
Typ. non-linearity*	µrad	-	0.5	-	0.5
Stiffness in z	N/µm	30		25	
Capacitance per axis (±20%)**	µF	2.5		3.6	
Voltage	V	-20 … 130		-20 … 130	
Material	-	Stainless Steel/ Aluminum		Stainless Steel/ Aluminum	
Cable length****		1	1.2	1	1.2
Tilting axis position		5mm below the top plate			
Dimensions (LxWxH)	mm	25x25x42	25x25x50	25x25x51	25x25x59
Mass	g	68	100	83	115

* typical value measured with NV 40/3 controller (closed loop: NV 40/3 CLE)

** typical value for small electrical field strength

*** the resolution is only limited by the noise of the power amplifier and metrology.

**** Connector voltage standard: LEMO 0S.302; connector feedback sensor standard: LEMO 0S.304

piezosystemjena
incredibly precise

PSH 1z - 4z

Part Drawing

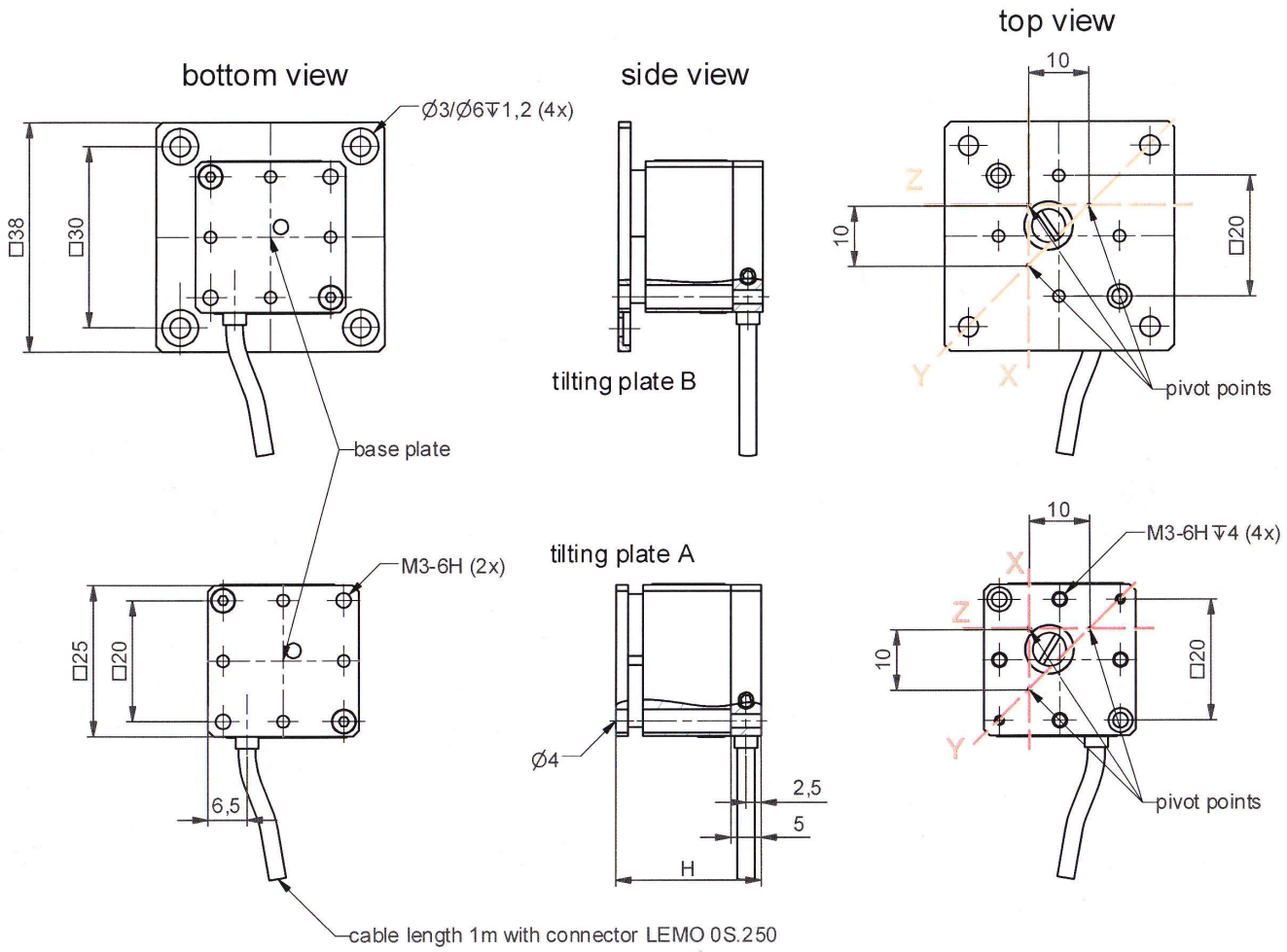

view with optional mounting clamp

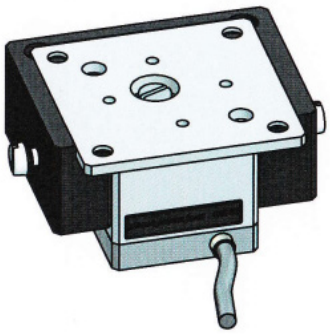

part.no. K-190-00

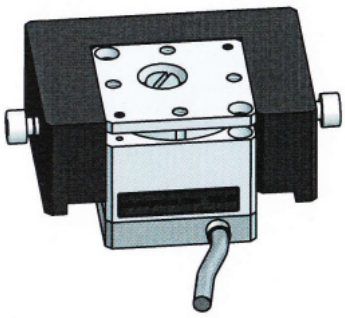

Dimensions given in mm.

piezosystem jena
incredibly precise

PSH 1z - 4z SG

Part Drawing

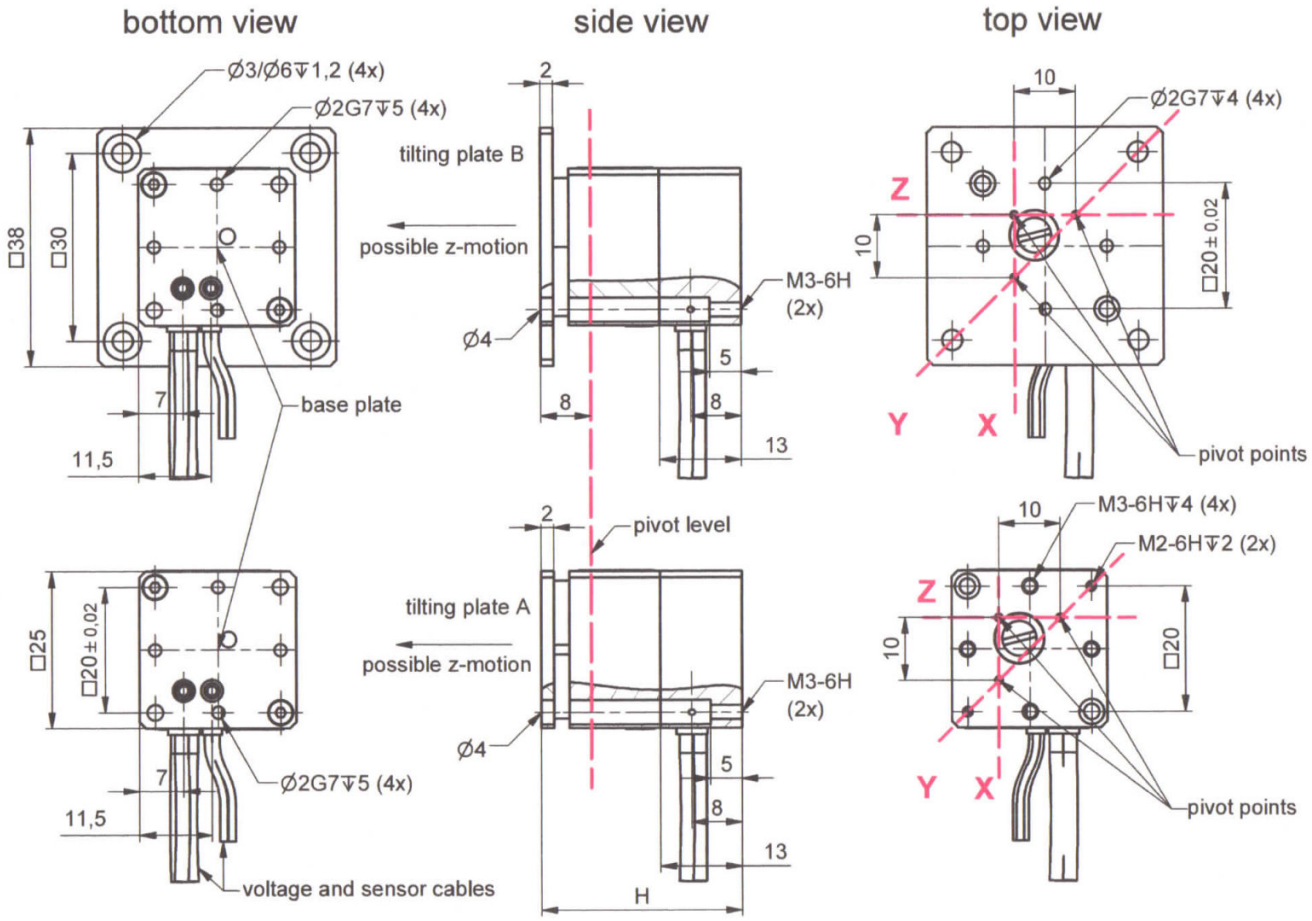

view with optional mounting clamp

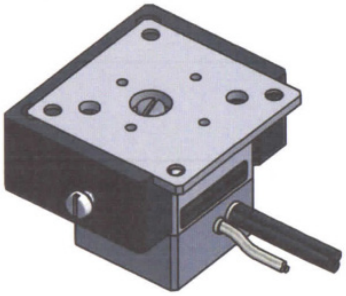

part.no. K-190-00

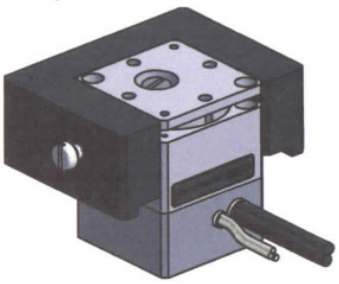

Dimensions given in mm.

piezosystem jena GmbH
Tel: +49 (3641) 66880
E-Mail: info@piezojena.com

piezosystem jena, Inc.
Tel: +1-508-634-6688
E-Mail: contact@psj-usa.com

www.piezosystem.com